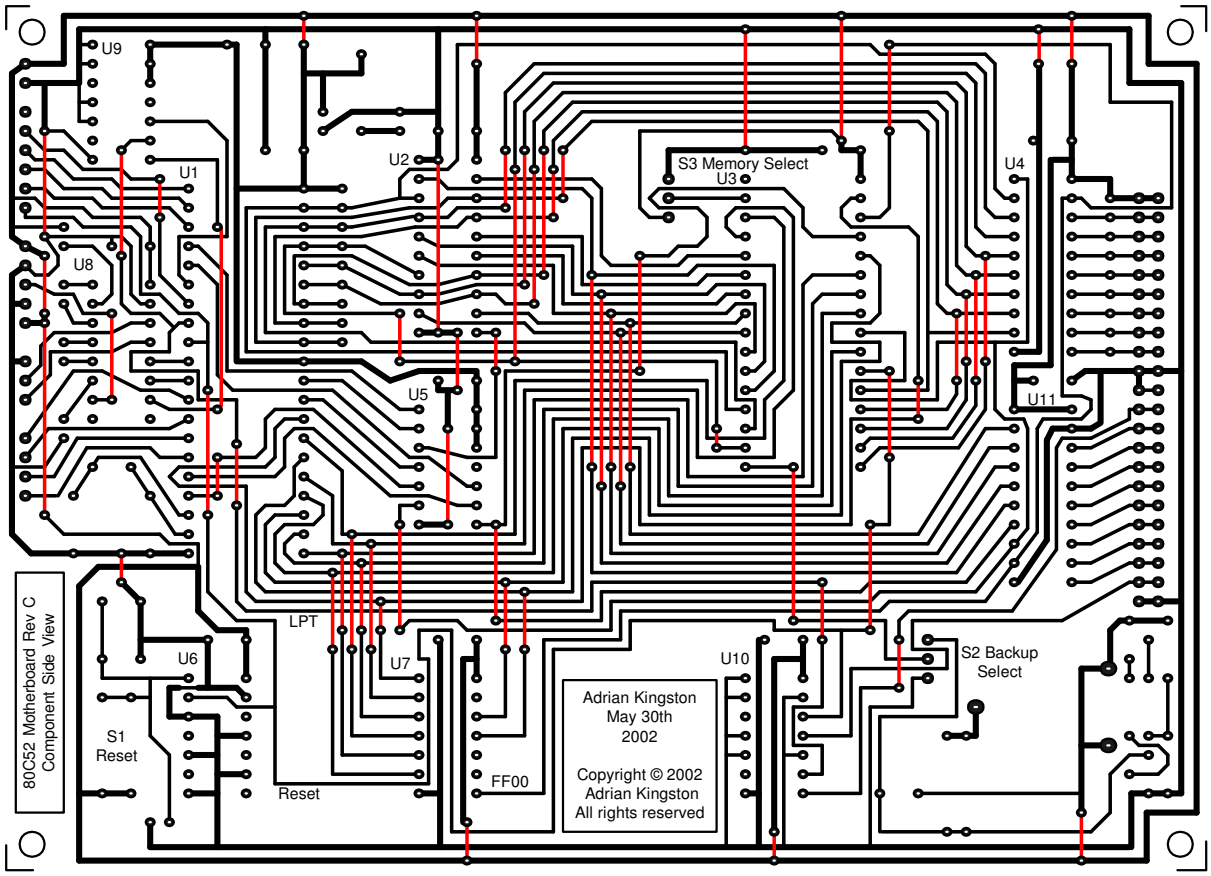
U9
U1
U2
U8
U5
S3 Memory Select
U3
U4
U11
LPT
U6
U7
U10
S2 Backup
Select
S1
Reset
Reset
FF00
Adrian Kingston
May 30th
2002
Copyright © 2002
Adrian Kingston
All rights reserved
80C52 Motherboard Rev C
Component Side View